US006792892B2

(12) **United States Patent**
**Craig**

(10) **Patent No.: US 6,792,892 B2**
(45) **Date of Patent: Sep. 21, 2004**

(54) **PORTABLE PEN FOR SHIPPING LIVESTOCK BY CONTAINER SHIP, RAIL AND TRUCK**

(76) Inventor: **Peter C. Craig**, 36080 Russell Blvd., Davis, CA (US) 95616

( * ) Notice: Subject to any disclaimer, the term of this patent is extended or adjusted under 35 U.S.C. 154(b) by 0 days.

(21) Appl. No.: **09/918,697**

(22) Filed: **Jul. 30, 2001**

(65) **Prior Publication Data**

US 2001/0052327 A1 Dec. 20, 2001

**Related U.S. Application Data**

(63) Continuation of application No. 09/151,992, filed on Sep. 11, 1998.

(51) **Int. Cl.**[7] ..... **A01K 1/00**
(52) **U.S. Cl.** ..... **119/502**
(58) **Field of Search** ..... 119/502, 503, 119/510, 511, 512, 513, 514, 515

(56) **References Cited**

U.S. PATENT DOCUMENTS

| | | | | |
|---|---|---|---|---|
| 23,045 | A | | 2/1859 | Samuels |
| 286,976 | A | | 10/1883 | Utley |
| 729,702 | A | | 6/1903 | Trachsel |
| 747,494 | A | | 12/1903 | Smith |
| 1,187,990 | A | | 6/1916 | Hawkins |
| 1,230,484 | A | | 6/1917 | Howd |
| 1,636,189 | A | | 7/1927 | Louden |
| 3,204,606 | A | | 9/1965 | Parr |
| 3,292,965 | A | | 12/1966 | Powers |
| 3,386,600 | A | | 6/1968 | Betiemann |
| 3,402,845 | A | | 9/1968 | Ericksson |
| 3,459,326 | A | | 8/1969 | Betiemann |
| 3,476,084 | A | | 11/1969 | Nater |
| 3,530,830 | A | | 9/1970 | Smith |
| 3,588,166 | A | | 6/1971 | Day |
| 3,621,818 | A | | 11/1971 | Johnston |
| 3,633,963 | A | | 1/1972 | Haynes |
| 3,744,456 | A | | 7/1973 | Wheeler |
| 3,792,558 | A | | 2/1974 | Berce |
| 3,824,958 | A | | 7/1974 | Parady |
| 3,892,202 | A | | 7/1975 | Feterl |
| 3,968,604 | A | * | 7/1976 | Hills ..... 52/745.07 |
| 3,981,410 | A | | 9/1976 | Schurch |
| 3,995,594 | A | | 12/1976 | Rose |

(List continued on next page.)

FOREIGN PATENT DOCUMENTS

| | | | |
|---|---|---|---|
| CA | 687590 | A | 6/1964 |
| DE | 2302854 | A | 7/1974 |
| DE | 2825628 | A1 | 1/1979 |

(List continued on next page.)

OTHER PUBLICATIONS

Undated photograph showing Modified Enclosed Containers for Shipping Livestock, a.k.a. "Cowtainers".

(List continued on next page.)

*Primary Examiner*—Thomas Price
(74) *Attorney, Agent, or Firm*—Charles R. Cypher; James R. Cypher

(57) **ABSTRACT**

The present invention provides a novel collapsible pen that is used in combination with a widely available modular unit used in the shipping industry. The present invention is economical to use by virtue of the fact that the pen may be stored inexpensively in a minimum of space in a disassembled state, may be assembled quickly, and may be easily and readily disassembled to permit alternate uses of the modular freight unit. The present invention consists of a collapsible pen erected on a standardized rectangular platform which has at least one side open to the air. The pen is made up of modular panels. The panels are attached to the rectangular platform, and can be used alone or in combination with any side or end walls present on the rectangular platform to create an enclosure.

**16 Claims, 8 Drawing Sheets**

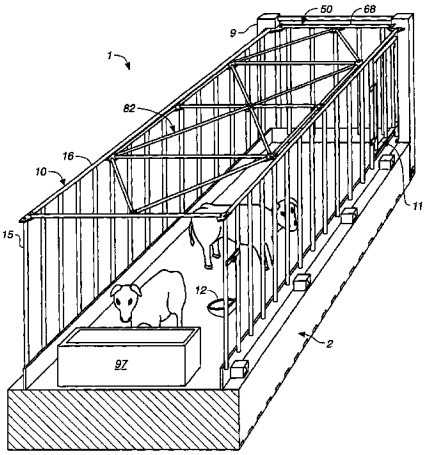

U.S. PATENT DOCUMENTS

| | | | | | |
|---|---|---|---|---|---|
| 4,002,147 | A | | 1/1977 | Feterl | |
| 4,010,974 | A | | 3/1977 | Day | |
| 4,057,165 | A | * | 11/1977 | Kardell | 16/225 |
| 4,084,714 | A | | 4/1978 | Williams | |
| 4,148,277 | A | | 4/1979 | Engle | |
| 4,151,925 | A | | 5/1979 | Glassmeyer | |
| 4,339,047 | A | | 7/1982 | Johansson | |
| 4,454,837 | A | | 6/1984 | Luebke | |
| 4,470,231 | A | | 9/1984 | Lewis | |
| 4,557,400 | A | | 12/1985 | Clarke | |
| 4,566,404 | A | | 1/1986 | Instone | |
| 4,714,169 | A | | 12/1987 | Keenan | |
| 4,787,603 | A | | 11/1988 | Norton | |
| 4,836,143 | A | | 6/1989 | Shadbolt | |
| 4,836,395 | A | | 6/1989 | Goutille | |
| 4,966,310 | A | * | 10/1990 | Hawkins | 141/10 |
| 5,040,490 | A | | 8/1991 | DeRocho | |
| 5,170,746 | A | | 12/1992 | Roose | |
| 5,190,179 | A | * | 3/1993 | Richter et al. | 220/1.5 |
| 5,201,498 | A | | 4/1993 | Akins | |
| 5,263,601 | A | * | 11/1993 | Borow | 220/1.5 |
| 5,265,748 | A | | 11/1993 | Furukawa | |
| 5,275,301 | A | | 1/1994 | Clive-Smith | |
| 5,381,757 | A | | 1/1995 | Putney | |
| 5,381,915 | A | * | 1/1995 | Yardley | 206/600 |
| 5,398,832 | A | | 3/1995 | Clive-Smith | |
| 5,494,167 | A | | 2/1996 | Hasegawa | |
| 5,651,330 | A | | 7/1997 | Jewett | |
| 5,671,854 | A | | 9/1997 | Thomas | |
| 5,676,271 | A | | 10/1997 | Reynard | |
| 5,761,854 | A | * | 6/1998 | Johnson et al. | 135/116 |
| 5,806,863 | A | | 9/1998 | Heger | |
| 5,810,186 | A | | 9/1998 | Lam | |
| 5,823,375 | A | | 10/1998 | Nessfield | |
| 6,112,929 | A | * | 9/2000 | Ota | 220/1.5 |

FOREIGN PATENT DOCUMENTS

| | | | |
|---|---|---|---|
| EP | 560448 | A1 | 9/1993 |
| FR | 2388491 | A1 | 11/1978 |
| GB | 245610 | | 1/1926 |
| GB | 848257 | | 9/1960 |
| GB | 1568072 | A | 5/1980 |
| GB | 2096555 | A | 10/1982 |
| NL | 7508284 | A | 1/1977 |
| SU | 793513 | A | 1/1981 |
| SU | 1308280 | A1 | 5/1987 |
| SU | 1715262 | A1 | 2/1992 |
| WO | WO 93/15601 | A1 | 8/1993 |

OTHER PUBLICATIONS

Tower, Courtney, Canned Cattle, The Journal of Commerce, vol. 413, No. 29,048, published Sep. 2, 1997, 3 p.

Written description of meetings between inventor and Matson employees in Aug. 1997, 1 p.

Written description of circumstances of first trial run of prototype on Sep. 12, 1997.

Letter from E.D. Stephens, Manager of Mechanical Engineering of Matson Navigation Company, Aug. 11, 1997, 2 p.

Confidential Disclosure Agreement signed by Paul Stevens, Senior V.P., Marketing Div. of Matson Navigation Company, effective as of Aug. 8, 1997, 1 p.

International Standard, Series 1 Freight Containers, Dec., 1995, Fifth Edition, Switzerland, 668.

International Standard, Freight Containers, 1981, First Edition, Switzerland, #830.

International Standard ISO 830–1981/Amendment 1, Freight Containers—Terminology, 1984, Switzerland.

International Standard, Series 1 Freight Containers—Corner Fittings—Specification, 1984, Fourth Edition, Switzerland, #1161.

International Standard, Series 1 Freight Containers, Part 5, Platform and Platform–based Containers, Switzerland #1496–5, 1994.

International Standard, Series 1 Freight Containers, Part 1, General Cargo Containers for General Purposes, Switzerland #1496–1, 1993.

International Standard, Freight Containers—Coding, Identification and Marking, Switzerland, #6346, 1995.

International Standardm, Series 1 Freight Containers, Part 5: Platform and Platform–based Containers, Switzerland, #1496–5, 1991, Second Edition.

* cited by examiner

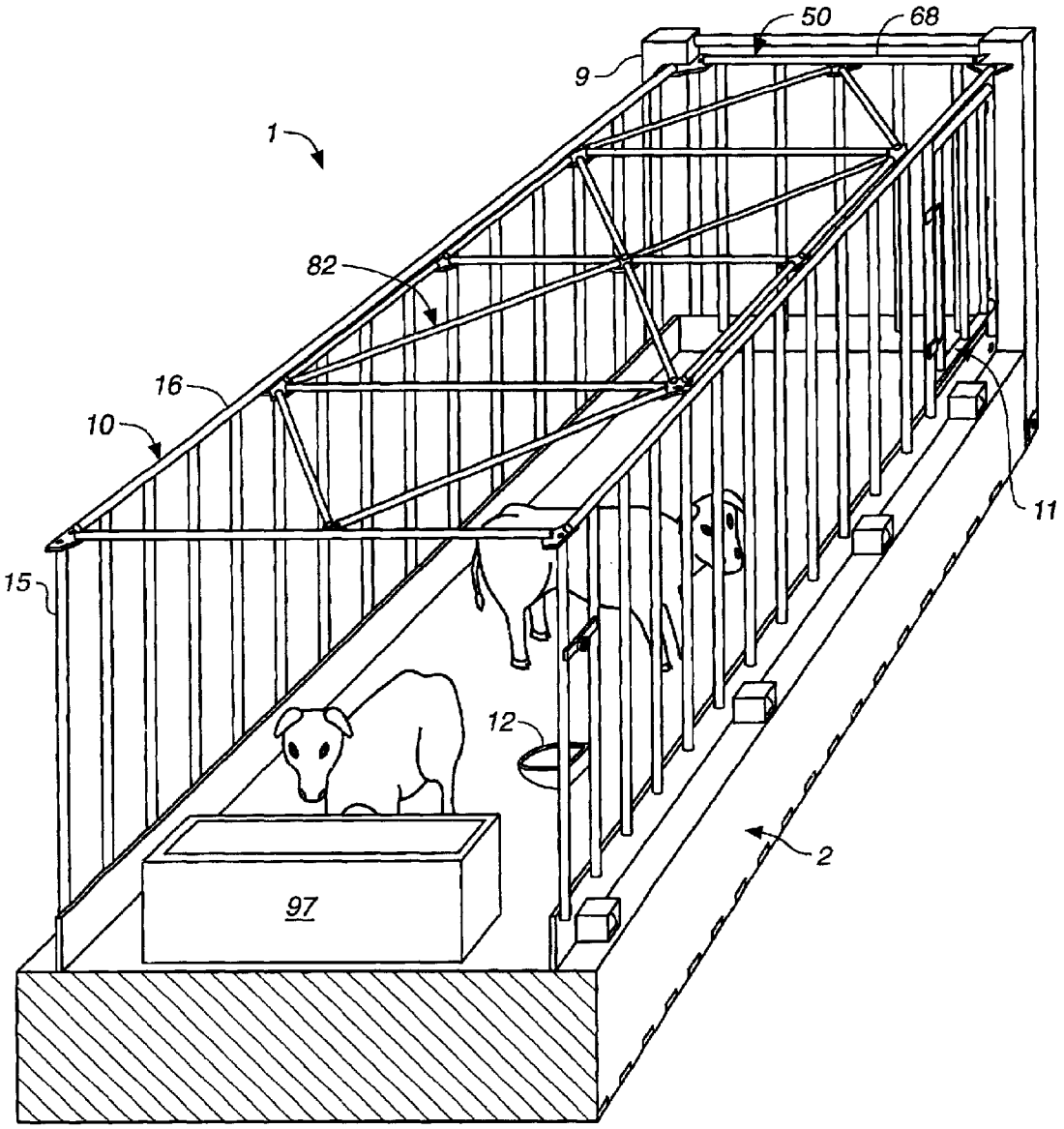


FIG._1

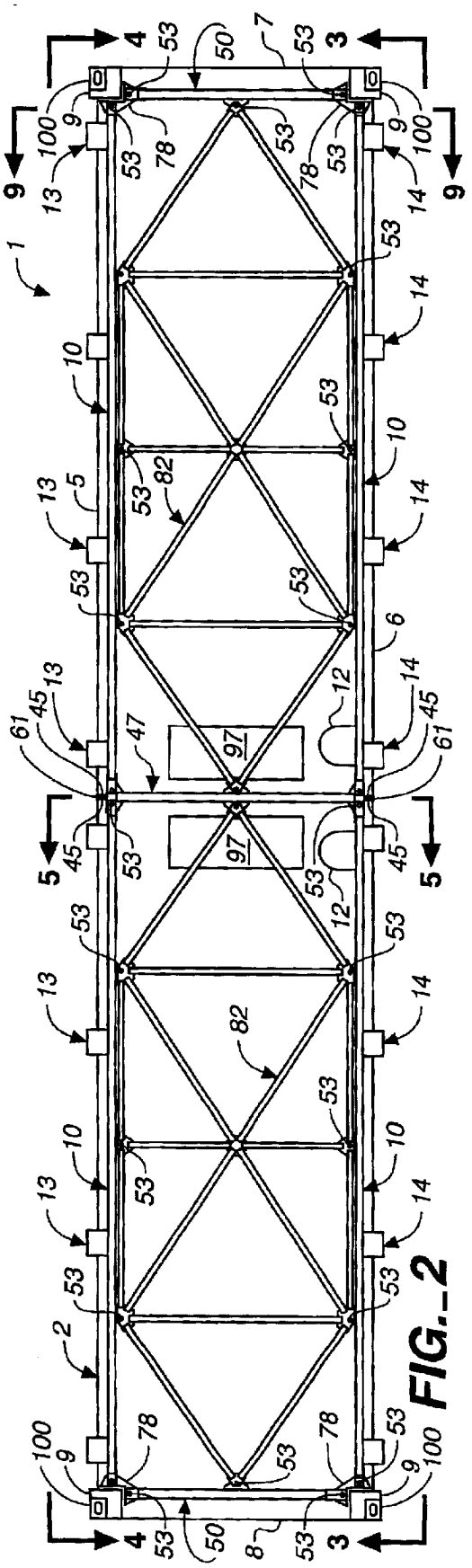

FIG._2

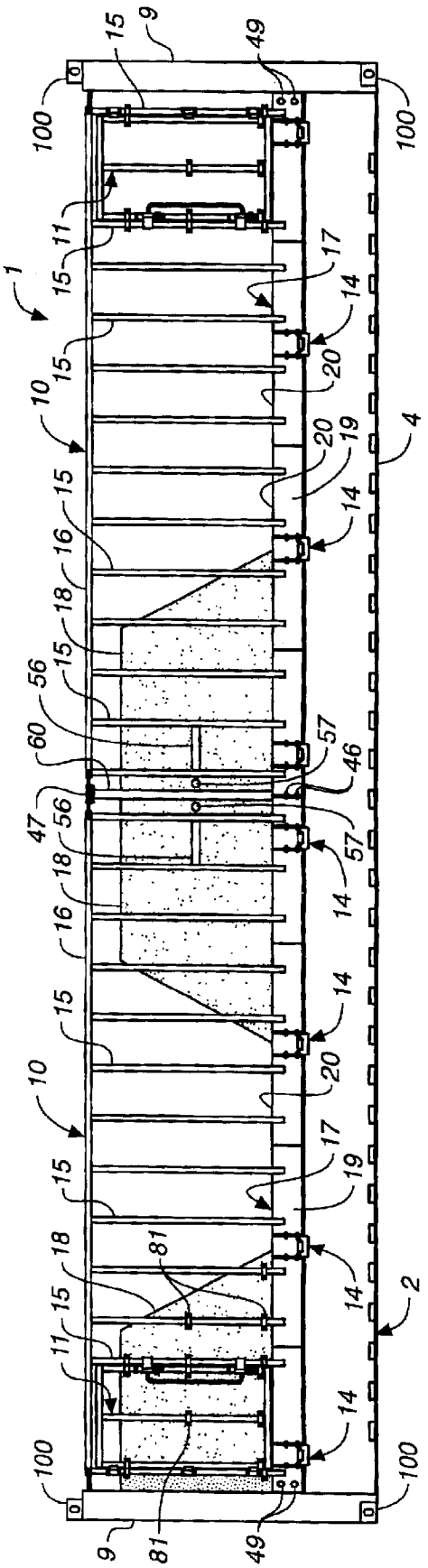

FIG._3

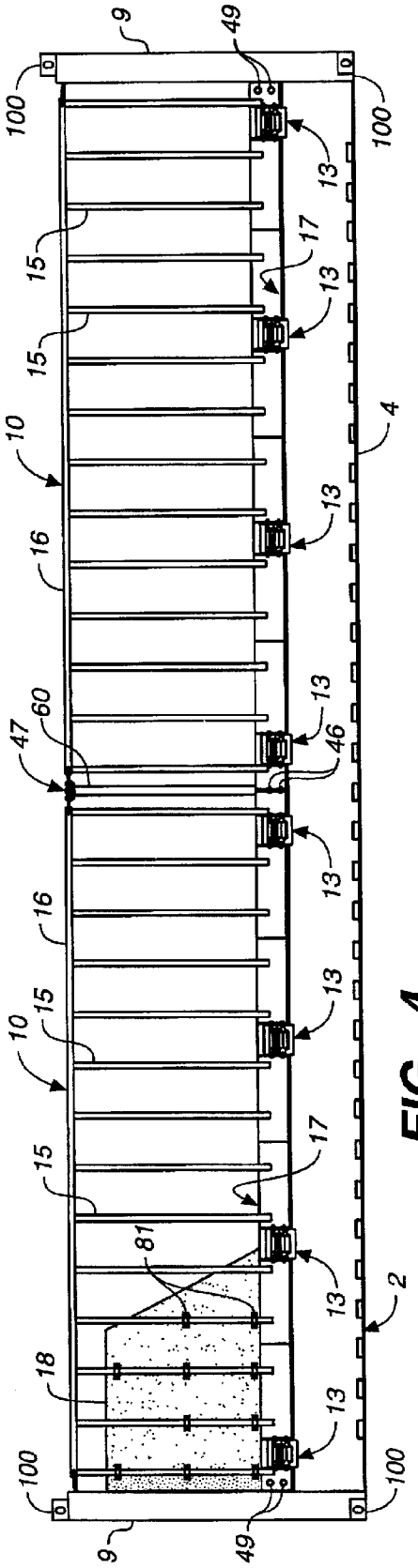


FIG._4

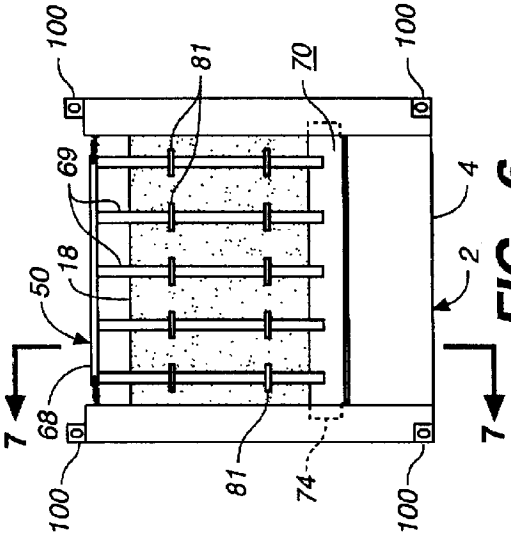


FIG._6

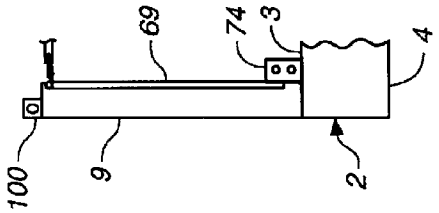


FIG._7

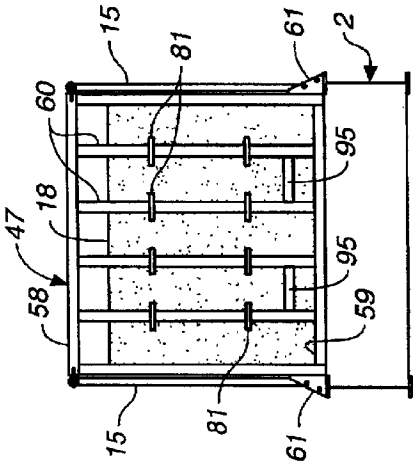


FIG._5

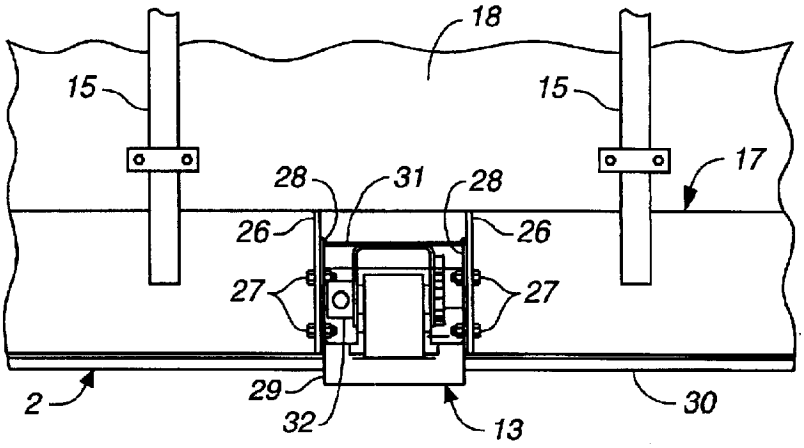


FIG._8

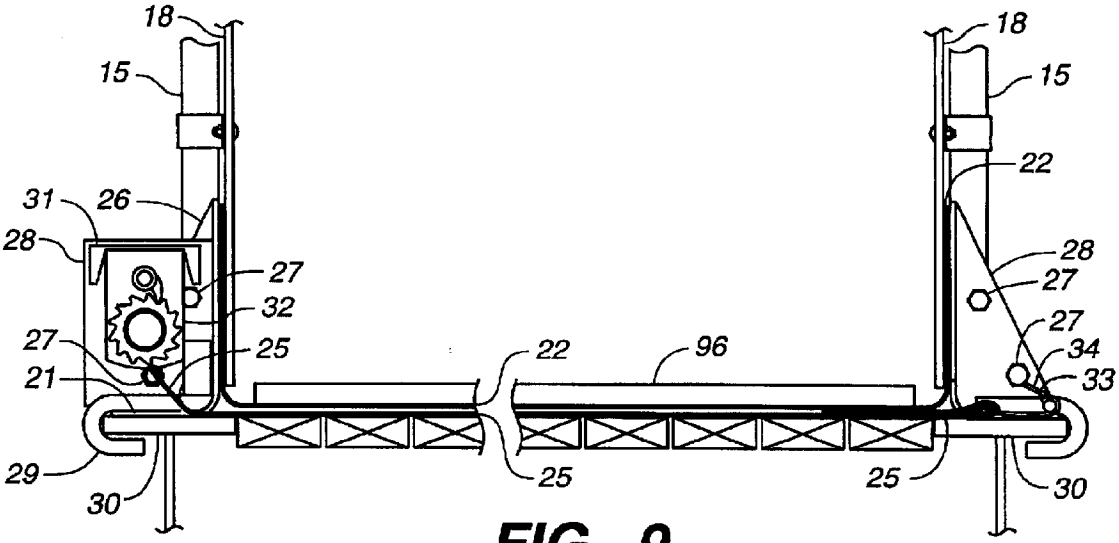


FIG._9

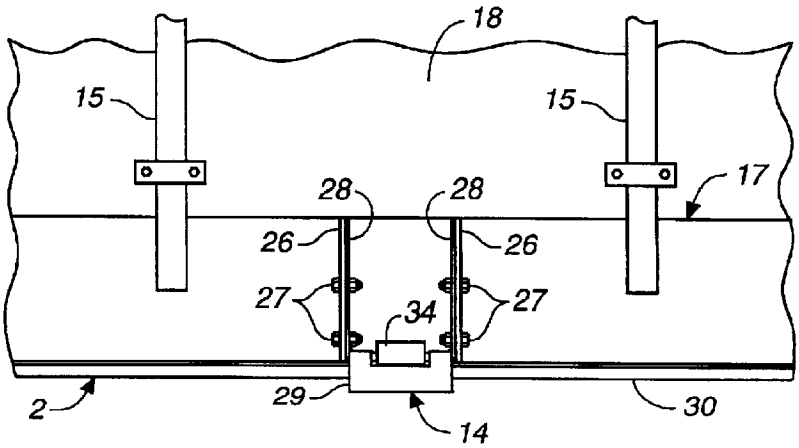


FIG._10

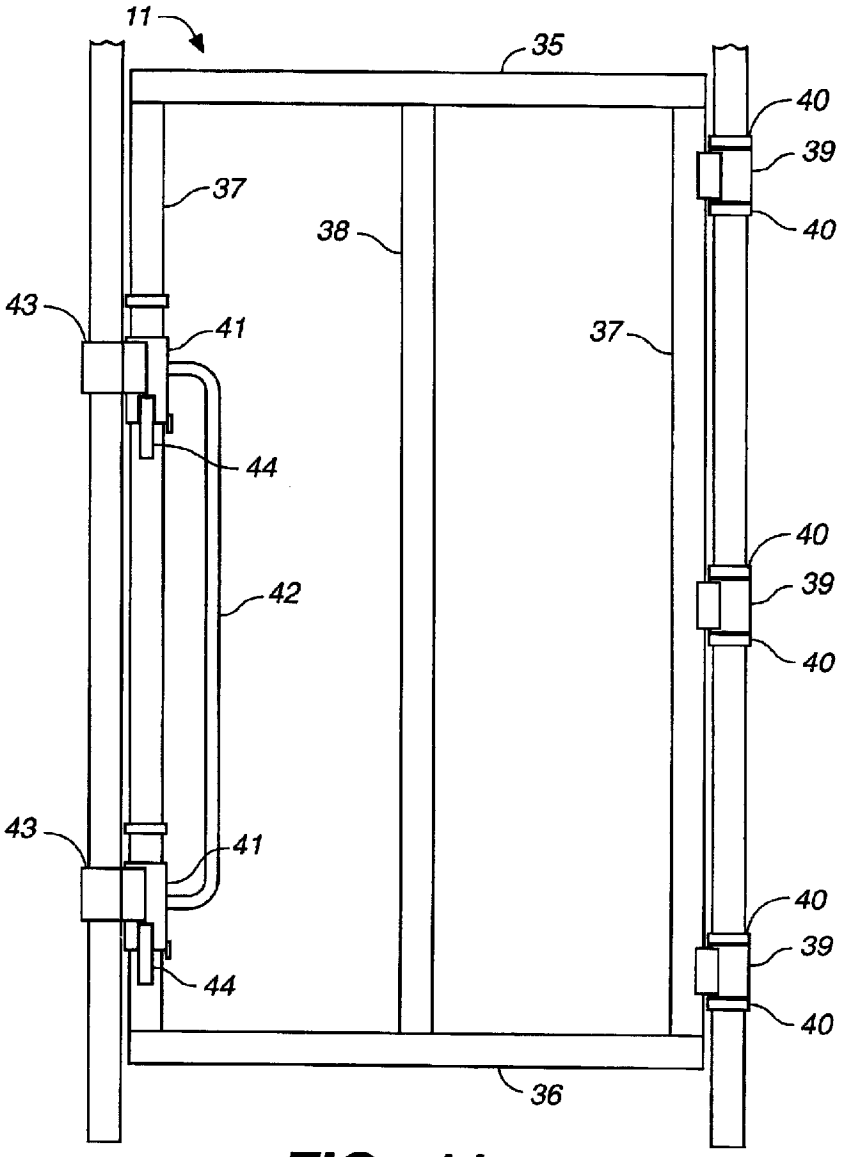
11
35
40
39
40
37
38
43
41
37
44
40
42
39
40
43
41
40
39
44
40
36

FIG._11

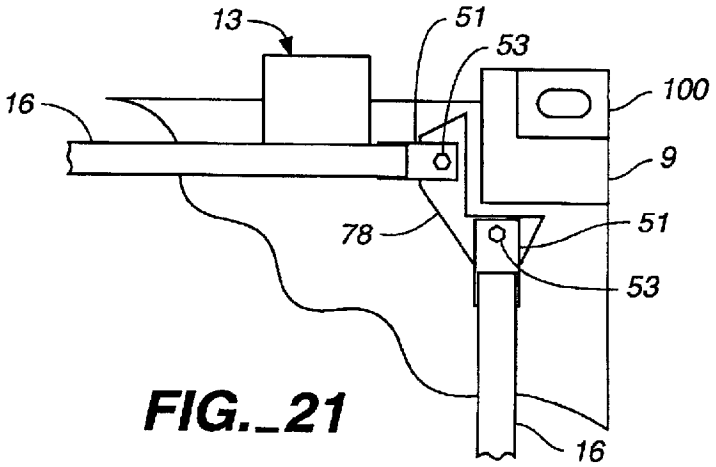
13
51
53
100
16
9
78
51
53
16

FIG._21

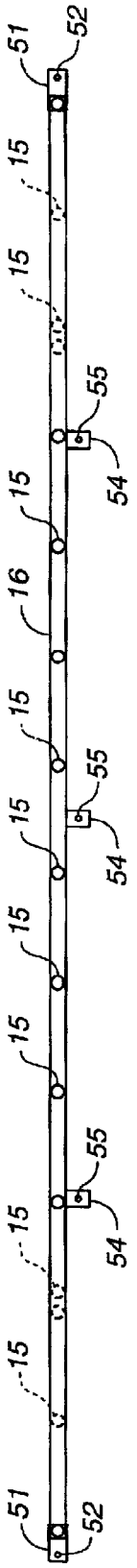
51
52
15
15
55
54
15
16
15
55
54
15
15
15
55
54
15
15
51
52

FIG._12

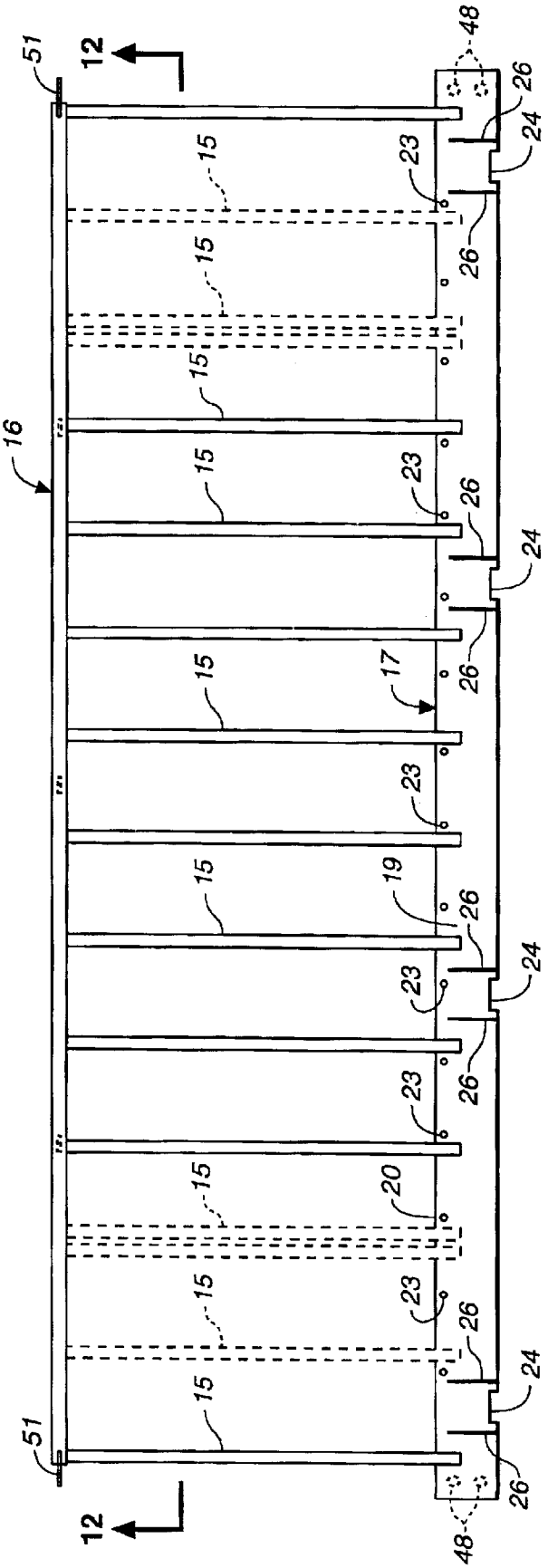
51
12
48
26
24
15
23
26
15
15
16
15
23
26
24
26
15
17
23
15
19
26
24
23
26
23
15
20
15
23
26
24
15
51
26
12
48

FIG._13

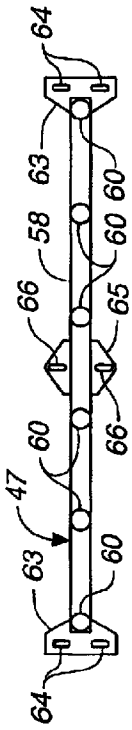


FIG._14

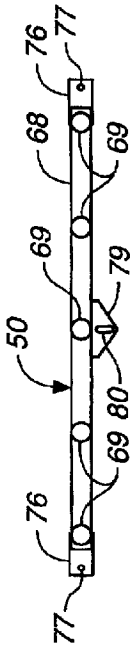


FIG._17

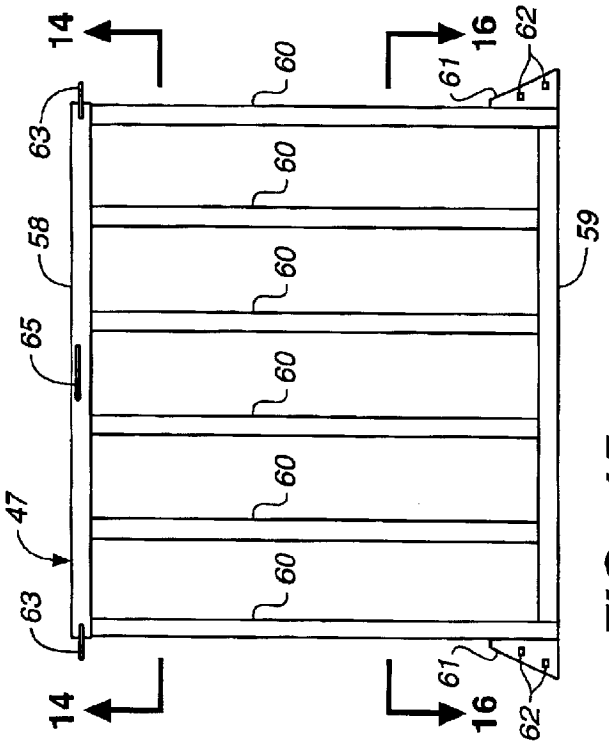


FIG._15

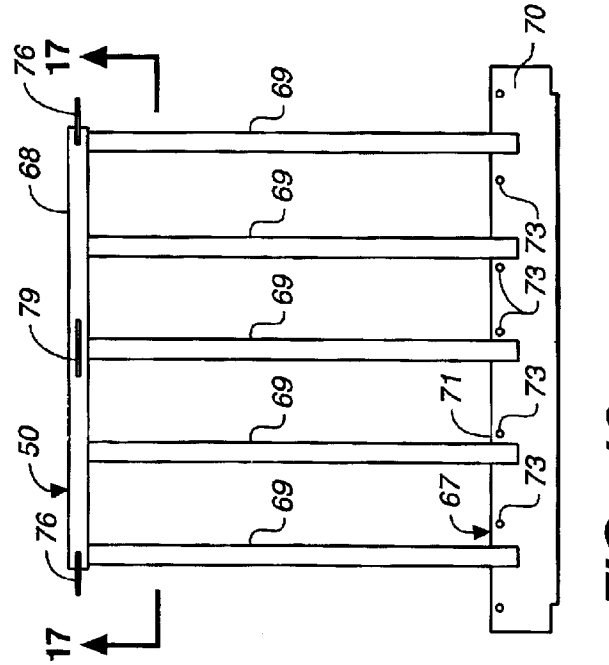


FIG._18

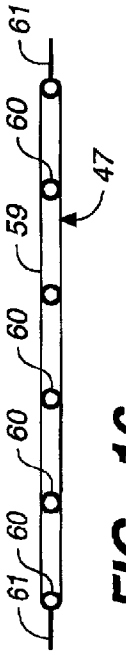


FIG._16

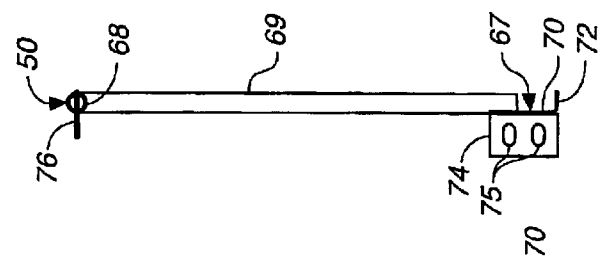


FIG._19

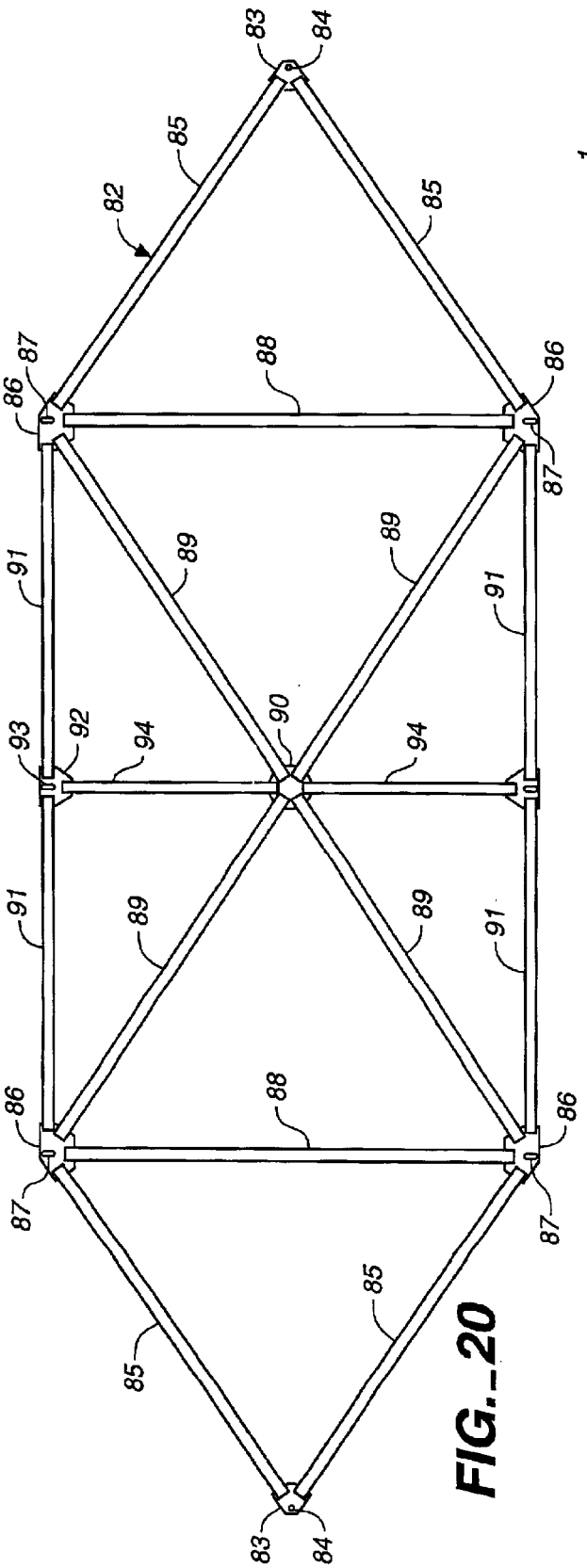
83
84
85
82
85
87
86
88
86
87
91
89
89
91
93
92
94
90
94
91
89
89
91
86
88
86
87
87
85
85
83
84

FIG._20

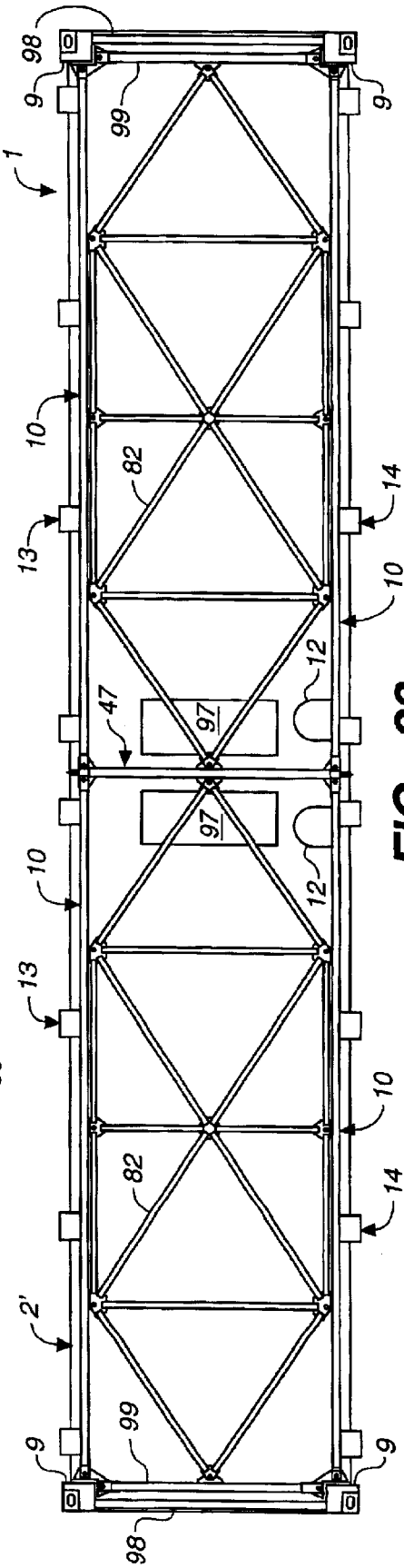
98
9
99
9
1
10
82
14
13
10
12
47
97
97
12
10
13
10
82
14
2'
99
9
9
98

FIG._22

# PORTABLE PEN FOR SHIPPING LIVESTOCK BY CONTAINER SHIP, RAIL AND TRUCK

This application is a continuation of U.S. application 09/151,992, filed Sep. 11, 1998.

## BACKGROUND

This invention relates to shipping livestock. Specifically, this invention relates to the specific field of using modular units to ship livestock overseas. The present invention consists of a standard rectangular platform used in container shipping that has been modified to hold livestock. In the preferred form of the invention, the standard rectangular platform to be modified is a platform-based container with incomplete superstructure and fixed ends. One common or general descriptor, used in the trade which encompasses such a rectangular platform, is the term "flatrack". Platform-based containers can be stacked like cargo containers, and they can be transported over land by rail or by truck as well. The modifications made to the rectangular platform do not interfere with these characteristics. The modifications consist of modular panels erected around or near the perimeter of the standard rectangular platform, creating an enclosure, that can be assembled or disassembled wherever and whenever it is convenient.

The prior art teaches a number of methods for shipping livestock overseas in modular units.

If only one or only a few animals are to be shipped, the prior art teaches using special conveyances adapted to fit in the belly of a commercial plane. See U.S. Pat. No. 4,566,404 granted to Giles A. Instone and Jeremy A. Instone, entitled: Animal Conveyance Capable of Conversion into an Air Freight Container (Instone '404). Instone '404 teaches that it is desirable that a conveyance for shipping livestock be capable of multi-functional use. This means that the conveyance need not be transferred empty from one location to another, wasting valuable cargo space. Like Instone '404, the present invention is a conveyance designed for the transportation of livestock which is also capable of being converted with minimal effort into a conveyance for other freight.

Another approach, suitable when more than just a few animals are to be shipped, has been to modify general purpose containers so that livestock can be shipped on container ships. See U.S. Pat. No. 5,651,330 granted Jul. 29, 1997 to Larry Hayward Jewett, entitled: Shipping Container for Shipping Livestock. Using a modified general purpose container creates a number of efficiencies. First, a standardized general purpose container can be loaded onto a tractor-trailer rig, a train car or an ocean or lake freighter. This minimizes time lost in transferring a load from one mode of transportation to the next. Secondly, by using modular containers the load carrying ability of the vehicle or vessel involved is maximized. A shipper can take only a few units or a large number of units and fill excess space with other types of goods.

However, modified general purpose containers present a problem if animals are to be shipped in only one direction. Since modified general purpose containers are usually not suitable for carrying other types of cargo, they often travel the return journey empty, wasting money and space. The present invention avoids this problem by adding components to a standard platform-based container that can be easily removed, rather than making permanent changes to the platform-based container.



Another approach is taught by U.S. Pat. No. 5,040,490, granted to Mark DeRoche, entitled Collapsible Livestock Transport Stable (DeRoche '490). DeRoche '490 uses collapsible modular stables to ship livestock. The stables of DeRoche '490 are easily disassembled and assembled. While the modular stables of DeRoche '490 are not designed to travel on container ships, where the efficiencies of shipping mixed cargo are maximized, the stables of DeRoche '490 are designed to be easily collapsed and stored in a minimum of space. This means that if animals are to be shipped only one way, the stables can make the return journey in a collapsed state taking up less room and therefore saving on transportation costs. The present invention is like DeRoche '490 in that is provides a conveyance for shipping livestock that can quickly and easily be disassembled wherever it is convenient. Further, like DeRoche '490, the panels of the present invention can be shipped in a disassembled state in a minimum of space. The present invention improves upon DeRoche '490 by using a standard platform-based container as its base. This means not only that the present invention can be used on container ships, but further that its largest component can be utilized to carry other cargo rather than travel unused on return trips when no livestock are shipped.

The present invention provides a novel collapsible pen that is used in combination with a widely available modular unit used in the shipping industry. The present invention is economical to use by virtue of the fact that the pen may be stored inexpensively in a minimum of space in a disassembled state, may be assembled quickly, and may be easily and readily disassembled to permit alternate uses of the modular freight unit.

## SUMMARY OF THE INVENTION

The present invention consists of a collapsible pen erected on a standardized rectangular platform which has at least one side open to the air. The pen is used for shipping livestock. The pen is made up of modular panels. The panels are attached to the rectangular platform, and can be used alone or in combination with any side or end walls present on the rectangular platform to create an enclosure. The present invention provides a means of transport that provides adequate ventilation for the health and safety of the livestock, while also adequately containing the animals' fecal waste. The present invention further takes advantage of the efficiencies available in container shipping.

It is the principal object of the present invention to provide a novel and improved conveyance for shipping livestock.

It is a further object of the present invention to provide a conveyance that is suitable for transporting livestock by truck, rail and ship.

It is a further object of the present invention to provide a pen or corral suitable for use on a platform-based container, that can quickly and easily be disassembled so that the platform-based container on which it is erected can be used for carrying other cargo.

The panels of the present invention are designed so that they can be stacked in a minimum of space such that the components for multiple conveyances can fit on one platform-based container for return journeys when they are not used.

A further object of the present invention is to provide an improved livestock carrier unit which can be converted completely into a general cargo container leaving no trace of its use as a livestock carrier.

A further object of the present invention is the provision of an improved portable livestock pen which is efficient in operation, sturdy in use, and economical to manufacture.

## DETAILED DESCRIPTION OF THE DRAWINGS

FIG. **1** is a simplified, sectional, perspective view of a partially completed portion of the portable livestock pen of the present invention. Cattle are shown contained inside the pen. The posts of the platform based container open sided are shown without corner fittings which can be added.

FIG. **2** is a top plan view of the portable livestock pen of the present invention. The winch and hook assemblies are not shown in detail.

FIG. **3** is a side view of the portable livestock pen of the present invention taken along line **3** of FIG. **2**.

FIG. **4** is a side view of the portable livestock pen of the present invention taken along line **4** of the FIG. **2**.

FIG. **5** is a transverse sectional view of the portable livestock pen of the present invention showing the mid panel of the present invention, taken along line **5**.

FIG. **6** is an end view of the portable livestock pen of the present invention taken along line **6** of FIG. **1**. The other end view of the portable livestock pen is similar.

FIG. **7** is a sectional side view of an end panel of the portable livestock pen. A portion of a first top truss is shown.

FIG. **8** is a detail of the winch assembly. The front portion of the mounting flange is not shown so that the connection between the winch and the mounting flange can be shown.

FIG. **9** is transverse cross section of the portable livestock pen of the present invention, showing the winch assembly and the hook assembly in detail.

FIG. **10** is a detail of the hook assembly.

FIG. **11** is a detail of a gate in a side panel of the present invention.

FIG. **12** is a cross-sectional view of a side panel taken along line **12** of FIG. **13**.

FIG. **13** is a front view of a side panel of the present invention. The studs shown in phantom represent alternate positions for studs depending on whether a gate is installed in the side panel.

FIG. **14** is a cross-sectional view taken along line **14** of FIG. **15**.

FIG. **15** is a front view of the middle panel of the present invention.

FIG. **16** is a cross-sectional view taken along line **16** of FIG. **15**.

FIG. **17** is a cross-sectional view taken along line **17** of FIG. **18**.

FIG. **18** is a front view of an end panel of the present invention.

FIG. **19** is a side view of an end panel of the present invention.

FIG. **20** is a top plan view of a one of the trusses of the top frame of the present invention.

FIG. **21** is a detail plan view of a corner portion of the livestock pen of the present invention showing the corner bracket.

FIG. **22** is a plan view of an alternate form of the livestock pen of the present invention erected on a rectangular platform based container open sided with incomplete superstructure and fixed ends and end walls disposed between the corner posts.

## DESCRIPTION OF THE PREFERRED EMBODIMENT

The present invention consists of a livestock pen **1** for transporting livestock by rail, truck or on a container ship with other standardized freight containers. The pen has a base. The base consists of a rectangular platform **2** having a top **3** and a bottom **4**, and a perimeter extending around the top of the rectangular platform **2**, defined by two side edges **5** and **6** and two end edges **7** and **8**. The two side edges **5** and **6** and two end edges **7** and **8** meet at four corners. Four posts **9** of equal height are attached to the rectangular platform. The four posts **9** are located at the four corners and extend from the top **3** of the rectangular platform **2**. The posts **9** together with the two side edges **5** and **6** and the two end edges **7** and **8** define four perimeter planar areas which extend perpendicular to the rectangular platform **2** and from the top **3** of the rectangular platform **2** at its perimeter. During transit of the rectangular platform **2**, at least one of the perimeter planar areas is open to the air, having no wall, panel or other fixed closure means which is part of the rectangular platform **2**. Further the rectangular platform **2** is of standardized dimensions, formation and configuration such that the rectangular platform **2** is suitable for transport on a container ship stacked with other standardized freight containers. The pen **1** further has a plurality of panels erected on and connected to the rectangular platform **2**, creating an enclosed area on the rectangular platform for containing livestock.

The International Organization of Standardization (ISO) provides definitions of freight containers that are useful in defining the rectangular platform **2** of the present invention. These definitions are found in a publication called ISO 830 Freight containers—Terminology, First Edition, 198-11-15, hereinafter called ISO 830:1981.

ISO 830:1981 first identifies a subgroup of freight containers called general cargo containers. At section 4.1.1 of ISO 830:1981 the term "general cargo container" is defined as follows: "This is a general term applicable to any type of container which is not intended for use in air mode transport and which is not primarily intended for the carriage of a particular category of cargo such as a cargo requiring temperature control, a liquid or gas cargo, dry solids in bulk or cargoes such as automobiles (cars) or livestock." The rectangular platform **2** that serves as the base of the present invention is a sub-group of general cargo containers as defined.

ISO 830:1981 then goes on to distinguish general purpose containers from specific purpose containers. At ISO 830:1981 section 4.1.1.1 a "general purpose container" is defined as a "[f]reight container, totally enclosed and weather-proof, having a rigid roof, rigid side walls, rigid end walls and a floor, having at least one of its end walls equipped with doors and intended to be suitable for the transport of cargo of the greatest possible variety." The rectangular platform **2** of the present invention is not a general purpose container as defined.

A "specific purpose container" is considered a "general term applicable to all general cargo containers having constructional features either for the "specific purpose" of facilitating packing and emptying other than by means of doors at one end of the container, or for other specific purposes such as ventilation." ISO 830:1981 section 4.1.1.2. The rectangular platform **2** of the present invention is a sub-group of specific purpose containers as defined.

The term "rectangular platform" as used in the claims is considered to encompass the term "platform based container open sided" as defined in ISO 830:1981 at section 4.1.1.2.3, except any limitations as to series designations should be omitted from the definition of "rectangular platform". The term "platform based container open sided" is "applied to

any general cargo container which does not have rigid side walls or equivalent structures I capable of withstanding all of the loads that may be withstood or transmitted by a side wall of a general purpose container and which, for this reason has a base structure similar to that of a platform (container). (See 4.1.1.2.4)." ISO 830:1981, section 4.1.1.2.3.

ISO 830:1981 at section 4.1.1.2.4 defines a "platform (container)" as a "[l]oadable platform having no superstructure whatever but having the same length and width as the base of a container of the same series and equipped with top and bottom corner fittings, located in the plan view as on containers of series **1**, so that some of the same securing and lifting devices can be used."

ISO 830:1981 discusses three main sub-types of platform based container open sided. The first is "the platform based container open sided with complete superstructure" which is defined as a "[p]latform-based container, having a permanently fixed longitudinal load-carrying structure between ends at the top." ISO 830:1981, section 4.1.1.2.3.1. This sub-type is further divided into "those having a rigid roof and rigid end walls (open sided); . . . those having an open top and rigid end walls; . . . those having an open top and open ends (skeletal)." ISO 830:1981, section 14.1.1.2.3.1. The second sub-type are "platform based containers with incomplete superstructure and fixed ends" which are defined as a "[p]latform based container without any permanently fixed longitudinal load-carrying structure between ends other than at the base." ISO 830:1981, section 4.1.1.2.3.2. The third sub-type defined is a "platform based container with incomplete superstructure and folding ends." This sub-type is defined at ISO 830:1981, section 4.1.1.2.3.3, as a "platform based container with incomplete superstructure (as envisaged in 4.1.1.2.3.2) but having folding end frames with a complete transverse structural connection between corner posts."

A description follows of the construction and attachment of the modular panels to a 40' by 8' by 8' rectangular platform **2** of standardized dimensions, formation and configuration such that the rectangular platform **2** is suitable for transport on a container ship stacked with other standardized freight containers. Such a construction constitutes the preferred embodiment of the present invention and is shown in FIG. **2**. In the preferred embodiment, the rectangular platform **2** is a platform based container with an incomplete superstructure and fixed ends, wherein the fixed ends consist of fixed free-standing posts **9**.

The platform based container open sided with an incomplete superstructure and fixed ends consisting of free-standing posts **9** of the preferred embodiment is built in conformance with the following International Organization of Standardization publications, the disclosure of which is incorporated by reference:

- ISO 668 Series 1 freight containers—Classification, dimensions and ratings, Fifth Edition, 1995-12-15;
- ISO 830 Freight Containers Terminology, First Edition, 1981-11-15;
- ISO 1161 Series 1 freight containers—Corner Fittings Specification, Fourth Edition, 1984-12-15;
- ISO 1496-5 Series 1 freight containers—Specification and testing—Part 5: Platform and platform-based containers, Second Edition, 1991-12-15;
- ISO 1496-5 Series 1 freight containers—Specification and testing—Part 5: Platform and platform-based containers Amendment 1, Second Edition, 1993-03-01;
- ISO 1496-5 Series 1 freight containers—Specification and testing—Part 5: Platform and platform-based containers Amendment 2, Second Edition, 1994-09-01;
- ISO 6346 Freight Containers—Coding, identification and marking, Third Edition, 1995-12-01.

These publications are made available to the general public in the United States by the American National Standards Institute, located at 11 West 42nd Street, New York, N.Y., 10038. These publications detail ISO construction standards for all platform based containers open sided.

As shown in FIG. **2**, in the preferred embodiment, two side panels **10** are used to span the distance between the corner posts **9** of the rectangular platform **2** along its elongated side edges **5** and **6**. On a 40' rectangular platform, a total of four side panels **10** are used. See FIG. **2**. The four side panels **10** are similar in construction. Variations in construction are determined by whether a side panel **10** will be fitted with a gate **11**, whether it will be fitted with a water trough **12** or other accessories, and whether it will be fitted with a winch assembly **13** or a hook assembly **14**.

FIG. **13** shows a preferred side panel **10** prior to being fitted with either a winch assembly **13** or a hook assembly **14**. Phantom lines are meant to represent the alternate sites for the attachment of studs **15** depending on whether a gate **11** or gates **11** are built into the side panel **10**. If a gate **11** is to be positioned near an end of a side panel **10**, the first two studs **15** near that particular end of the panel shown in phantom are not used, and only the third and next stud **15** shown in phantom lines is used. If no gate **11** is to be positioned near a particular end of a side panel **10**, then studs **15** are placed at the first two sites demarcated in phantom lines near that particular end, and the next site shown in phantom lines is not used.

The side panel **10** is framed with a top rail **16** and a kick plate **17** along the top and bottom edges of the side panel **10** respectively. The top rail **16** and the kick plate **17** are disposed generally parallel to each other. See FIG. **13**.

A plurality of vertically disposed studs **15** connect the top rail **16** to the kick plate **17**. The number of vertically disposed studs **15** used will depend on the desired spacing between the studs **15** and whether the side panel **10** will be formed with a gate **11**. The studs **15** should be spaced close enough to adequately support the paneling **18** against being pushed too far out by the animals and to provide sufficient rigidity to the side panel **10**. In the preferred embodiment, where cattle are to be transported, the studs **15** are generally spaced 16.5625" apart. The studs **15** are welded to the top rail **16** and the kick plate **17**. Preferably, the tops of the studs **15** are cut to form a saddle in which the top rail **16** can rest.

The top rail **16** and studs **15** are made of hollow 6061-T6 aluminum tubing. The top rail **16** tubing has a diameter of 2'. The studs **15** have a diameter of approximately 1.5". The kick plate **17** is also made from 6161-T6 aluminum, and is approximately ¼ thick.

The kick plate **17** is formed with a generally elongated planar main body **19**, having a top edge **20**, and with an outwardly extending lower flange **21** disposed at a right angle to the main body **19** of the kick plate **17**. See FIGS. **13** and **9**. This lower flange **21** rests on the rectangular platform **2**. Because, in the preferred form, the impermeable membrane **22** for containing the livestock waste is tied to the kick plate **17** near its top edge **20**, the kick plate **17** needs to be tall enough to anchor the impermeable membrane **22** above the level of waste in the enclosure. See FIG. **9**. As is shown in FIG. **13**, openings **23** are provided in the kick plate **17** near its top edge **20** for anchoring the impermeable membrane **22**.

As is shown in FIG. **13**, notches **24** are made in the kick plate **17** at intervals along its length. The notches remove material from the lower flange **21** and portions of the main

body **19**. These notches **24** are designed to receive straps **25** that will connect opposed side panels **10** when the enclosure is erected. On either side of each notch **24**, panel gussets **26** are welded to the kick plate **17**. See FIGS. **8**, **9** and **10**. The generally triangular panel gussets **26** connect to the main body **19** of the kick plate **17** and the lower flange **21** of the kick plate **17** along two sides. The panel gussets **26** are formed with openings for receiving first attachment fasteners **27**. The panel gussets **26** are used to connect either winch assemblies **13** or hook assemblies **14** to the kick plate **17** of the side panel **10** by means of the first attachment fasteners **27**. See FIGS. **8**, **9** and **10**.

As shown in FIGS. **8** and **10**, the winch assemblies **13** and the hook assemblies **14** are each formed with two side plates **28** and a outwardly extending flange hook **29** that comprises the base for the assembly. These members can be welded together. The flange hooks **29** of the winch and hook assemblies **13** and **14** receive the side flanges **30** on the rectangular platform **2** and anchor the side panels **10** to the rectangular platform **2**. Openings are formed in the side plates **28** of the winch and hook assemblies **13** and **14**. These openings align with the openings in the panel gussets **26** when the winch and hook assemblies **13** and **14** are installed properly. First attachment fasteners **27** pass through the openings in the side plates **10** and through the openings in the panel gussets **26**. The first attachment fasteners **27** are preferably machine bolts with threaded nuts.

As shown in FIGS. **8** and **9**, the winch assemblies **13** are further formed with a mounting flange **31** disposed between the side plates **28** near the top of the side plates **28**. A winch **32** is mounted on the mounting flange **31** for tensioning the strap **25** that connects opposed side panels **10**. The winch **32** can be welded to the mounting flange **31**. The strap **25** as a tensioning member braces the side panels **10** against forces that would push them outward.

In the preferred form, the hook assemblies **14** are formed with a pin **33** that can receive a hook **34** attached to the strap **25** that braces the lower ends of the side panels **10**. See FIG. **9**. The pin **33** can be welded to the flange hook **29** of the hook assembly **14**. When the enclosure is erected on a rectangular platform **2**, an elongated strap **25** with a hook **34** is attached to the pin **33** of the hook assembly **14** and the free end of the strap **25** is run through the notch **24** in the side panel **10** to which the hook assembly **14** is adjacent. As shown in FIG. **9**, the strap **25** runs across the rectangular platform **2** to its other side and through a corresponding notch **24** in the kick plate **17** of the opposed side panel **10**. The free end of the strap **25** is threaded into the winch **32** and a lever is used to turn the winch **32** until the strap **25** is wound tightly onto the winch **32** and placed in tension such that it can brace the opposed side panels **10** against outward displacement forces.

As mentioned earlier, preferably, some of the side panels **10** are formed with gates **11** for the ingress and egress of the animals and handlers. FIG. **11** shows a detailed view of a gate **11** formed in a side panel **10**. The gate **11** is framed with a top strut **35**, a bottom strut **36**, two vertically disposed end struts **37** and an intermediate vertical strut **38**. The struts **35**, **36**, **37** and **38** are welded to each other. Hinges **39** for the gate **11** are mounted on one of the end struts **37** of the gate **11**. The hinges **39** receive one of the studs **15** of the side panel **10**. Annular rings **40** are welded onto the stud **15** received by the hinges **39** to appropriately position the hinges **39**. The other end strut **37** of the gate **11** is formed with a latching mechanism **41**. The latching mechanism **41** rotates on the end strut **37** and is manipulated with a handle **42**. Tabs **43** on the latching mechanism **41** receive the other stud **15** of the side panel **10** that frames the gate **11** when the gate **11** is in its latched position. The latching mechanism **41** is provided with a locking mechanism **44** that prevents the latching mechanism **41** from rotating on the end strut **37** unless the latching mechanism **41** is raised above the locking mechanism **44**.

As shown in FIG. **2**, in the preferred embodiment, the kick plate **17** of each side panel **10** at a selected end is further provided with a mid-panel connector gusset **45**. This mid-panel connector gusset **45** is similar to the panel gussets **26** welded to the kick plate **17**. The mid-panel connector gusset **45** is also welded to the kick plate **17**. The mid-panel connector gusset **45** is formed with openings for receiving second attachment fasteners **46**. The second attachment fasteners **46** connect the mid-panel connector gusset **45** to a gusset on the middle panel **47** and to the corresponding mid-panel connector gusset **45** on the adjacent side panel **10**. The second attachment fasteners **46** are also preferably machine bolts with threaded nuts.

In the preferred embodiment, the kick plate **17** of each side panel **10** at a second selected end is formed with end panel attachment openings **48** for receiving third attachment fasteners **49**. See FIGS. **3** and **13**. Positions for these openings **48** are shown in phantom in FIG. **13**. The third attachment fasteners **49** connect the kick plate **17** of the side panel **10** to the adjacent end panel **50**. The third attachment fasteners **49** are also preferably machine bolts with threaded nuts.

In the preferred embodiment, the top rail **16** of the side panel **10** is provided with a plurality of connection tabs. See FIG. **12**. The connection tabs attach the top rail **16** to the other components of the enclosure. The first set of connection tabs are the side panel end tabs **51** which are located at the ends of the top rail **16**. The side panel end tabs **51** are each formed with an opening **52** for receiving a fourth attachment fastener **53**. The fourth attachment fasteners **53** are also preferably machine bolts with threaded nuts. Preferably, the ends of the top rails **16** are notched and the side panel end tabs **51** are inserted into the notches and welded in place. The side panel end tabs **51** are generally planar and rectangular in configuration, and extend parallel to the rectangular platform. The side panel end tabs **51** are made from 6061-T6 aluminum and are approximately ¼" thick.

The second set of connection tabs on the side panel top rail **16** are the side panel intermediate tabs **54**. See FIG. **12**. In the preferred embodiment, there are three such side panel intermediate tabs **54** spaced at regular intervals along the top rail **16**. The side panel intermediate tabs **54** are also formed as generally rectangular planar members. Each is formed with an opening **55** for receiving a fourth attachment fastener **53**. The side panel intermediate tabs **54** extend generally perpendicular to the studs **15** and generally parallel to the rectangular platform **2** when the enclosure is erected. The side panel intermediate tabs **54** are welded to the top rail **16**. The side panel intermediate tabs **54** are made from 6061-T6 aluminum and are approximately ¼" thick.

As shown in FIGS. **2** and **3** the side panels **10** can be fitted with additional accessories. As shown in FIG. **2**, two of the side panels **10** are fitted with water troughs **12**. As shown in FIG. **3**, each of the side panels shown is fitted with a strut **56** disposed between two of the studs **15** for mounting a water trough **12**. Next to each strut is a hose bib **57** for providing water to the trough **12**. Preferably, the trough **12** is fitted with an automatic shut-off valve that is triggered when the level of the water in the trough **12** reaches a certain height.

To provide rigidity to the preferred embodiment built on a 40' rectangular platform **2**, a middle panel **47** is also used.

The middle panel **47** traverses the rectangular platform **2** and is connected to all four side panels **10**. See FIG. **2**.

As is shown in FIG. **15**, the middle panel **47** is framed with a top rail **58** and a bottom rail **59** along the top and bottom edges of the middle panel **47** respectively. The top rail **58** and the bottom rail **59** are disposed generally parallel to each other.

A plurality of vertically disposed studs **60** connect the top rail **58** to the bottom rail **59**. The number of vertically disposed studs **60** used will depend on the desired spacing between the studs **60**. The studs **60** should be spaced close enough to adequately support the paneling **18** against being pushed by the animals and to provide sufficient rigidity to the middle panel **47**. In the preferred embodiment, where cattle are to be transported, the studs **60** are generally spaced 15" apart. The studs **60** are welded to the top rail **58** and the bottom rail **59**. Preferably, the tops and bottoms of the studs **60** are cut to form a saddle in which the top rail **58** and the bottom rail **59** can rest.

The top rail **58**, bottom rail **59** and studs **60** are made of hollow 6061-T6 aluminum tubing. The tubing for the top and bottom rails **58** and **59** has a diameter of 2.5". The studs **60** also have a diameter of approximately 2.5".

As shown in FIGS. **15** and **16**, side panel connector gussets **61** are welded to the two outermost studs **60** of the middle panel **47**. These gussets **61** are generally planar and triangular and lie in line with the bottom rail **59**. They are connected on the outside of the outermost studs **60** along one edge, preferably by welding. The generally triangular side panel connector gussets **61** are formed with openings **62** for receiving second attachment fasteners **46**. The side panel connector gusset **61** is similar to the mid-panel connector gussets **45** welded to the kick plates **17** of the adjacent side panels **10**. When the pen **1** is erected, the side panel connector gusset **61** of the middle panel **47** will lie between the two adjacent mid-panel connector gussets **45** with the openings in the three gussets **61** and **45** in alignment. See FIG. **2**. The second attachment fasteners **46** are inserted through the aligned openings and tightened so that the gussets **61** and **45** are held firmly together.

As shown in FIG. **14**, in the preferred embodiment, the top rail **58** of the middle panel **47** is provided with a plurality of connection tabs. The connecting tabs attach the top rail **58** to the other components of the enclosure. The first set of connection tabs are the mid-panel end tabs **63** which are located at the ends of the top rail **58**. The mid-panel end tabs **63** are each formed with two openings **64** for receiving fourth attachment fasteners **53**. Preferably, the ends of the top rail **58** are notched and the mid-panel end tabs **63** are inserted into the notches and welded in place. The mid-panel end tabs **63** are generally planar in configuration, and extend parallel to the rectangular platform. The mid-panel end tabs **63** are made from 6061-T6 aluminum and are approximately ¼" thick.

The mid-panel end tabs **63** will overlap adjacent side panel end tabs **51** when the pen **1** is erected, such that the openings **64** and **52** in the overlapping mid-panel and side-panel end tabs **63** and **51** will be alignment to receive fourth attachment fasteners **53**. The fourth attachment fasteners **53** are tightened such that the mid-panel and side panel end tabs **63** and **51** are clamped together.

The second set of connection tabs on the middle panel top rail **58** are the mid-panel intermediate tabs **65**. See FIG. **14**. In the preferred embodiment, there are two such mid-panel intermediate tabs **65** disposed on either side of the top rail **58** at its middle point. The mid-panel intermediate tabs **65** are also formed as generally planar members. Each is formed with an opening **66** for receiving a fourth attachment fastener **53**. The mid-panel intermediate tabs **65** extend generally perpendicular to the studs **60** and generally parallel to the rectangular platform when the enclosure is erected. The mid-panel intermediate tabs **65** are welded to the top rail **58**. The mid-panel intermediate tabs **65** are made from 6061-T6 aluminum and are approximately ¼" thick.

In the preferred embodiment, two end panels **50** are also provided that are similar to the middle panel **47** in size, but have kick plates **67** instead of bottom rails. See FIGS. **17**, **18** and **19**.

Each end panel **50** is framed with a top rail **68** and a kick plate **67** along the top and bottom edges of the end panel **50** respectively. See FIG. **18**. The top rail **68** and the kick plate **67** are disposed generally parallel to each other.

A plurality of vertically disposed studs **69** connect the top rail **68** to the kick plate **67**. The number of vertically disposed studs **69** used will depend on the desired spacing between the studs **69**. In the preferred embodiment, where cattle are to be transported, the studs **69** are generally spaced 15" apart. The studs **69** are welded to the top rail **68** and the kick plate **67**. Preferably, the tops of the studs **69** are cut to form a saddle in which the top rail **68** can rest.

The top rail **68** and studs **69** are made of hollow 6061-T6 aluminum tubing. The top rail **68** tubing has a diameter of 2.5". The studs **69** have a diameter of approximately 2.5" as well. The kick plate **67** is also made from 6161-T6 aluminum, and is approximately ¼" thick.

The kick plates **67** of the end panels **50** are formed in a similar fashion as the side panel kick plates **17**, however, there is no need in the preferred embodiment to provide the end panel kick plate **67** with either winch or hook assemblies. The kick plate **67** is formed with a generally elongated planar main body **70**, having a top edge **71**, and with an outwardly extending lower flange **72** disposed at a right angle to the main body **70** of the kick plate **67**. See FIG. **19**. This lower flange **72** rests on the rectangular platform **2**. Because, in the preferred form, the impermeable membrane **22** for containing the livestock waste is tied to the kick plate **67** near its top edge **71**, the kick plate **67** needs to be tall enough to anchor the impermeable membrane **22** above the level of waste in the enclosure. See FIG. **9** and FIG. **18**. As is shown in FIG. **18**, openings **73** are provided in the kick plate **67** near its top edge **71** for anchoring the impermeable membrane **22**.

As shown in FIG. **19**, attached to the kick plates **67** of the end panels **50** at their outer edges are side panel connector gussets **74**. The side panel connector gussets **74** are welded to the kick plate **67**. These gussets **74** are generally planar and rectangular and lie perpendicular to the kick plate **67**. These gussets **74** are formed with openings **75** for receiving third attachment fasteners **49**. When the pen **1** is erected, the side panel connector gusset **74** of the end panels **50** will lie adjacent to selected ends of the kick plates **17** of the side panels **10**. The openings **75** formed in the side panel connector gusset **74** will align with the end panel attachment openings **48** in the selected ends of the side panel kick plates **17**. With the openings **75** and **48** in alignment third attachment fasteners **49** can be inserted therethrough to rigidly connect the end panel **50** to the side panel **10**. If the side panel connector gusset **74** of the end panel **50** does not register with the kick plate **17** of the side panel **10**, a spacer can be placed between them to make the connection more rigid.

See FIG. **17**, in the preferred embodiment, the top rail **68** of each end panel **50** is provided with a plurality of connection tabs. The connecting tabs attach the top rail **68** to the

other components of the enclosure. The first set of connection tabs are the end panel end tabs **76** which are located at the ends of the top rail **68**. The end panel end tabs **76** are each formed with an opening **77** for receiving a fourth attachment fastener **53**. Preferably, the ends of the top rails **68** are notched and the end panel end tabs **76** are inserted into the notches and welded in place. The end panel end tabs **76** are generally planar and rectangular in configuration, and extend parallel to the rectangular platform **2**. The end panel end tabs **76** are made from 6061-T6 aluminum and are approximately ¼" thick.

The end panel end tabs **76** and the side panel end tabs **51** connect to an intermediate member called a corner bracket **78**. See FIGS. **2** and **21**. The corner bracket **78** is formed as a generally L-shaped member, with an opening in each of the legs. The interior angle of the L-shaped member is meant to receive the two interior sides of the corner post **9** of the rectangular platform **2**. Abutment plates may be provided on the two interior angle edges of the L-shaped corner bracket **78** to provide strength. The abutment plates would be welded to the L-shaped corner bracket **78** and disposed perpendicular to it.

When the pen **1** is erected, the corner brackets **78** are attached to adjacent end tabs **76** and **51** of the end panels **50** and side panels **10** with fourth attachment fasteners **53** inserted through the aligned openings and in the corner brackets **78** and the end tabs **76** and **51**.

The other connection tab on the end panel top rail **68** is the end panel intermediate tab **79**. In the preferred embodiment, the end panel intermediate tab **79** is disposed at the middle point of the top rail **68**. See FIG. **17**. The end panel intermediate tab **79** is also formed as a generally planar member with an opening **80** for receiving a fourth attachment fastener **53**. The end panel intermediate tab **79** extends generally perpendicular to the studs **69** and generally parallel to the rectangular platform **2** when the enclosure is erected. The end panel intermediate tab **79** is welded to the top rail **68**. The end panel intermediate tab **79** is made from 6061-T6 aluminum and is approximately ¼" thick.

On all of the panels, rigid polyethylene paneling **18** is mounted by means of brackets **81**. See FIGS. **3**, **4**, **5** and **6**. The polyethylene paneling **18** is mounted in abutment, such the animals for the most part will not be able to see outside of the enclosure. The polyethylene paneling **18** also helps to contain waste.

To give the enclosure further rigidity, a top frame is provided. The top frame serves, in part, as a bracing member. In the preferred embodiment, this top frame consists of two identical trusses **82**. Each truss **82** connects two opposed side panels **10** as well as the middle panel **47** and an end panel **50**. See FIG. **2**.

The trusses **82** connect to the intermediate tabs **54**, **79** and **65** of the side panels **10**, the end panels **50** and the middle panel **47** with fourth attachment fasteners **53**.

As shown in FIG. **20**, in the preferred embodiment, a truss **82** is constructed in the following manner. A truss end tab is **83** provided that is substantially planar and is formed with an opening **84** for receiving a fourth attachment fastener **53**.

Two first tube braces **85** of substantially equal length are connected to the first truss end tab **83**. Preferably, notches are formed in the ends of the fist tube braces **85** that will connect to the truss end tab **83**. The truss end tab **83** is received in those notches and welded to the first tube braces **85**. The first tube braces **85** extend away from the truss end tab **83** forming an interior angle between them that is less than 180 degrees.

Each of the free ends of the first tube braces **85** is attached to a separate truss corner tab **86**. The truss corner tab **86** is also substantially planar and is formed with an opening **87** for receiving a fourth attachment fastener **53**. Like the connection between the truss end tab **83** and the first tube braces **85**, each truss corner tab **86** is preferably inserted into a notch in a first tube brace **85** and then welded to it.

A second tube brace **88** spans between the truss corner tabs **86**, connecting them and forming a triangular frame with the first tube braces **85**. The connection between the second tube brace **88** and the two truss corner tab **86** is also made by notching the ends of the second tube brace **88** and fitting the truss corner tabs **86** into the notches and welding.

Third tube braces **89** of substantially equal length are connected to each of the truss corner tabs **86**. These third tube braces **89** extend from the truss corner connectors **86** on intersecting paths to create a similar triangular frame disposed opposite the first triangular frame created by the first tube braces **85** and the second tube brace **88**.

The third tube braces **89** are connected by a truss center tab **90** that is received in notches in the free ends of the third tube braces **89** and welded to them.

Also extending from each of the truss corner tabs **86** is a fourth tube brace **91**. These fourth tube braces **91** are of substantially equal length and extend generally parallel to each other and away from the first tube braces **85**. The fourth tube braces **91** are each connected to a truss corner tab **86** in a similar fashion as described above and each is also connected to a truss middle tab **92** in a similar fashion as described above.

The truss middle tab **92** is also a generally planar member with an opening **93** for receiving a fourth attachment fastener **53**.

Each of the truss middle tabs **92** is connected to the truss center tab **90** by fifth tube braces **94**. The two fifth tube braces **94** are substantially equal in length and are disposed in a line. Each fifth tube brace **94** together with an adjacent fourth tube brace **91** and an adjacent third tube brace **89** creates a triangular frame.

The fifth tube braces **94** connect to the truss middle tabs **92** and to the truss center tab **90** in the manner as described above for similar connections.

The remaining portion of the truss **82** is constructed in a similar manner and is a mirror image of the first portion of the truss **82** already described. Two additional third tube braces **89** are connected to the truss center tab **90**, and extend away from the truss center tab **90**, each in line with a third tube brace **89** connected to the truss center tab **90**. Two additional fourth tube braces **91** extend away from the truss middle tabs **92**, each in line with a fourth tube brace **91**. Each additional third tube brace **89** connects to an intersecting, additional fourth tube brace **91** by means of a truss corner tab **86**. The two additional truss corner tabs **86** are connected by an additional second tube brace **88**, creating another triangular framing element between the two additional third tube braces **89** and the additional second tube brace **88**. Finally, two additional first tube braces **85** are connected to each of the additional two truss corner tabs **86** and intersect at an additional truss end tab **83**.

The components of the truss are also preferably made out of 6061-T6 aluminum with the tube braces being approximately 1.25' to 1.5" inches in diameter.

The truss **82** is designed so that when the pen **1** is erected, one of the truss end tabs **83** will overlap with an end panel intermediate tab **79**, such that the openings **80** and **84** in the tabs **79** and **83** align and can receive a common fourth attachment fastener **53**. The other truss end tab **83** will overlap a middle panel intermediate tab **65** and the openings **66** and **84** in the tabs **65** and **83** will align to receive a fourth

attachment fastener **53**. Further, when the truss **82** is attached to the side panels **10**, the fourth tube braces **91** will parallel the top rails **16** of the side panels **10**. Each of the truss corner tabs **86** will connect to a side panel intermediate tab **54** by means of a fourth attachment fastener **53**. Each of the truss middle tabs **92** will also connect to separate side panel intermediate tab **54** by means of a fourth attachment fastener **53**.

After the side panels **10**, the end panels **50**, and the middle panel **47** have been connected to each other, impermeable membranes **22** are installed in each of the enclosures formed. In the preferred embodiment, the impermeable membrane **22** is a tarp with grommets spaced around its edges. The tarp is made from vinyl-coated nylon. The tarp is large enough to cover one-half of the rectangular platform **2** as well as extend up to the top edges **20** and **71** of the kick plates **17** and **67** of the side and end panels **10** and **50** and to a similar height on the middle panel **47**. The tarp is rectangular in shape and folded over itself at the corner intersections of the side panels **10** with the end panel **50** and the middle panel **47**. Ties are looped through the grommets in the tarp and through the openings **23** and **27** in the kick plates **17** and **67**. The middle panel **47** is provided with intermediate cross bars **95** for securing the tarp. See FIG. **5**.

After the tarp is laid down and secured, stall mats **96** are placed over the tarp to protect it. See FIG. **9**.

If the voyage will be of a long duration, a feeding trough **97** can be placed in each of the enclosures created by the middle panel **47** that divides the pen **1** into two enclosures. See FIG. **2**. The feeding troughs **97** can be secured to the middle pane **47**.**1**

The pen **1** can also be provided with mesh or tarp spread over the top frame to provide shade to the animals. It is preferred during most voyages that the rectangular platforms **2** with animals be shipped near deck level so that handlers can reach the animals. Since container ships usually stack many levels of containers in each column, the rectangular platforms will generally have containers stacked above them that can provide shade to the animals during the voyage.

The preferred embodiment of the present invention involves erecting panels on a rectangular platform **2** having corner posts **9**. The corner posts **9** provide longitudinal resistance to movement of the panels, as well as aiding the straps **22** and flange hooks **29** in providing lateral or transverse resistance. Additional anchoring points and lashing points on the rectangular platform **2** can be used to anchor the panels against longitudinal and lateral or transverse forces with methods generally known in the art.

As is shown in FIG. **22**, panels may be eliminated from the pen **1** and the enclosure still maintained. FIG. **22** shows a rectangular platform **2'** with incomplete superstructure and fixed ends, wherein the fixed ends consist of a complete end structure (end walls **98**). Because end walls **98** are present on the rectangular platform **2'**, end panels **50** are not needed to complete the enclosure. FIG. **22** shows a cross bar **99** connecting two opposed corner brackets **78** to provide further stability to the structure.

As shown in the drawings, the rectangular platforms **2** and **2'** are provided with corner fittings **100** to allow stacking of the rectangular platforms **2** and **2'** with other standardized freight containers, and to allow easy attachment of the rectangular platforms **2** and **2'** to trucks and rail cars designed to carry standardized freight containers.

I claim:

**1**. A livestock pen for transporting livestock by rail, truck or on a container ship with other standardized freight containers, comprising:

a. a platform based container open sided, said platform based container open sided lacking rigid side walls and having a base similar to that of a platform container, said platform based container open sided being formed with corner fittings to allow stacking of said rectangular platform based container open sided with other said standardized freight containers, and said platform based container open sided being rectangular in shape;

b. a plurality of panels erected on and connected to said platform based container open sided, creating an enclosed area on said rectangular platform based container open sided for containing livestock; and

c. an impermeable membrane installed in said enclosed area, said impermeable membrane covering said base and extending up said panels a selected distance for containing waste produced by said livestock.

**2**. A livestock pen for transporting livestock by rail, truck or on a container ship with other standardized freight containers, comprising:

a. a platform based container open sided, said platform based container open sided lacking rigid side walls and having a base similar to that of a platform container, said platform based container open sided being formed with corner fittings to allow stacking of said rectangular platform based container open sided with other said standardized freight containers, and said platform based container open sided being rectangular in shape;

b. at least one panel erected on said platform based container open sided such that an enclosed area on said platform based container open sided for containing livestock exists;

c. an impermeable membrane installed in said enclosed area, said impermeable membrane covering said base and extending up said enclosed area a selected distance for containing waste produced by said livestock.

**3**. The livestock pen of claim **1**, wherein:

a. said platform based container open sided comprises:

1. a base having a top and a bottom,
2. a perimeter extending around said top of said base, defined by two side edges and two end edges,
3. said side edges and said end edges meeting at four corners,
4. said rectangular platform based container open sided having four posts of equal height, attached to said base, located at said four corners and extending from said top of said base,
5. said posts together with said two side edges and said two end edges defining four perimeter planar areas extending perpendicular to said base and from said top of said base at said perimeter of said base,
6. at least one of said perimeter planar areas being open to the air during transit of said rectangular platform based container open sided; and wherein

b. at least one of said plurality of panels erected on and connected to said rectangular platform based container open sided, creating an enclosed area on said rectangular platform based container open sided for containing livestock, extends across said one of said four perimeter planar areas open to said air and extending perpendicular to said base.

**4**. The livestock pen of claim **2**, wherein:

a. said platform based container open sided comprises:

1. a base having a top and a bottom,
2. a perimeter extending around said top of said base, defined by two side edges and two end edges,
3. said side edges and said end edges meeting at four corners,

4. said rectangular platform based container open sided having four posts of equal height, attached to said base, located at said four corners and extending from said top of said base,

5. said posts together with said two side edges and said two end edges defining four perimeter planar areas extending perpendicular to said base and from said top of said base at said perimeter of said base,

6. at least one of said perimeter planar areas being open to the air during transit of said rectangular platform based container open sided; and wherein

b. said at least one panel erected on said rectangular platform based container open sided such that an enclosed area on said rectangular platform based container open sided for containing livestock exists, extends across said one of said four perimeter planar areas open to said air and extending perpendicular to said base.

**5**. The livestock pen of claim **1**, wherein:

said panel consists of a frame, and paneling is attached to said frame to prevent livestock seeing out of said pen.

**6**. The livestock pen of claim **1**, wherein:

one of said panels is formed with a flange hook that anchors said panel to said rectangular platform based container open sided.

**7**. The livestock pen of claim **1**, wherein at least two panels are used and said panels are disposed opposite each other and said pen further comprises:

a tensioning member connecting said oppositely disposed panels.

**8**. The livestock pen of claim **1**, wherein at least two panels are used and said panels are disposed opposite each other and said pen further comprises:

a bracing member connecting said oppositely disposed panels.

**9**. The livestock pen of claim **2**, wherein said panel comprises:

a. a frame having a top and a bottom; and

b. a flange hook mounted to the bottom of said frame that anchors said panel to said rectangular platform based container open sided.

**10**. The panel of claim **9**, further comprising:

means for receiving a tensioning member connected to said frame.

**11**. The panel of claim **10**, wherein:

said means for receiving a tensioning member is a winch assembly.

**12**. The panel of claim **10**, wherein:

said means for receiving a tensioning member is a hook assembly.

**13**. A method of transporting livestock, comprising:

a. erecting an enclosure on a platform based container open sided with panels, said platform based container open sided lacking rigid side walls and having a base similar to that of a platform container, said platform based container open sided being formed with corner fittings to allow stacking of said rectangular platform based container open sided with other said standardized freight containers, and said platform based container open sided being rectangular in shape, said enclosure having an impermeable membrane installed in said enclosure, said impermeable membrane covering said base and extending up said enclosure a selected distance for containing waste produced by said livestock;

b. loading livestock into said enclosure;

c. loading said platform based container with said livestock onto a means of transport;

d. moving said means of transport;

e. unloading said livestock from said enclosure.

**14**. The method of claim **13** wherein:

said means of transport is a container ship.

**15**. The method of claim **13** wherein:

said means of transport is a truck.

**16**. The method of claim **13** wherein:

said means of transport is a rail car.

* * * * *